FMC Technologies

Toolbox to ensure control of the details to fulfill system requirements.

KSEE, Kongsberg system engineering event 2012

Tom Eddy Johansen

Chief engineer

System engineering in 4 phases of a project

- Tender phase
- Project start-up phase
- Project execution phase.
- Verification and test phase.

System engineering in 4 phases of a project.

- Tender phase
  - Fully understand the customer requirements.
  - Design a system (high level) which is in accordance with customer needs and requirements.
  - Technical concept consisting of standard building blocks (as far as possible).

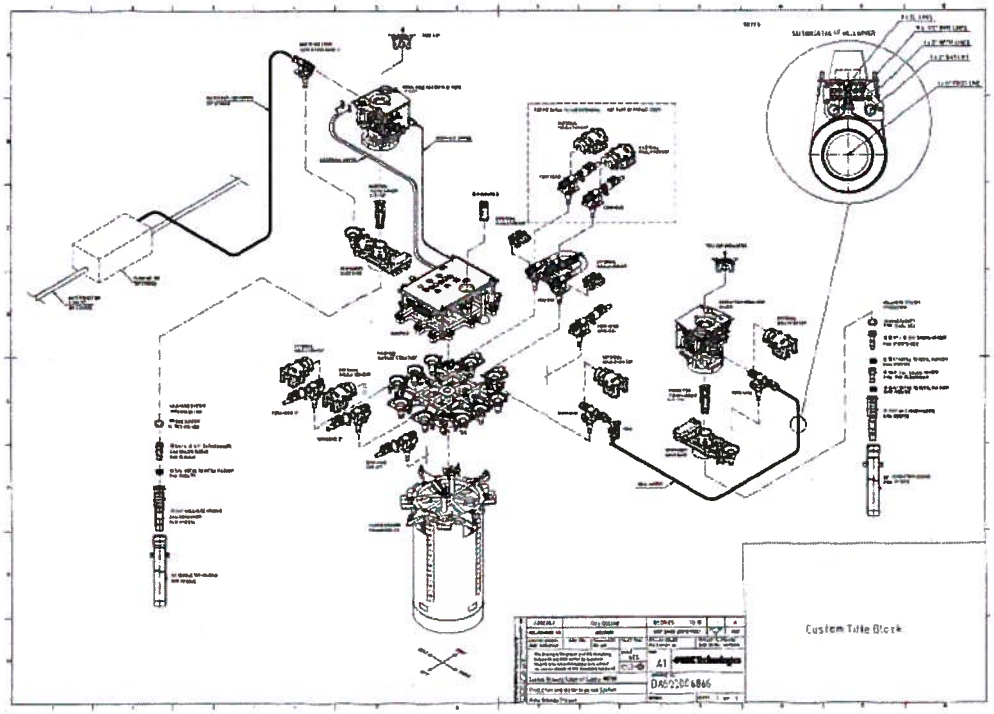

System engineering in 4 phases of a project.

- Tender phase
  - Perform technology maturity assessment and establish a technology qualification program.
  - Preliminary hydraulic and electrical analyses.
  - Preliminary flow assurance study (Insulation, injection, erosion)
  - Preliminary soil analyses and assement.
  - Global work-over assessment (Platform equipment, riser, EDP & LRP)
  - Establish Master Equipment list.
  - Internal concept review with all product departments.

System engineering in Project start-up phase.

- Establish the technical safety and reliability program.
- Establish the material selection and corrosion protection philoshophy
- Establish outline test program.
- Establish the following system engineering documents
  - Design basis.
    - Summarize the main function parameters and basic engineering information.
    - Define the interface requirements and scope of delivery.
  - Scope of supply drawings
  - System schematics.

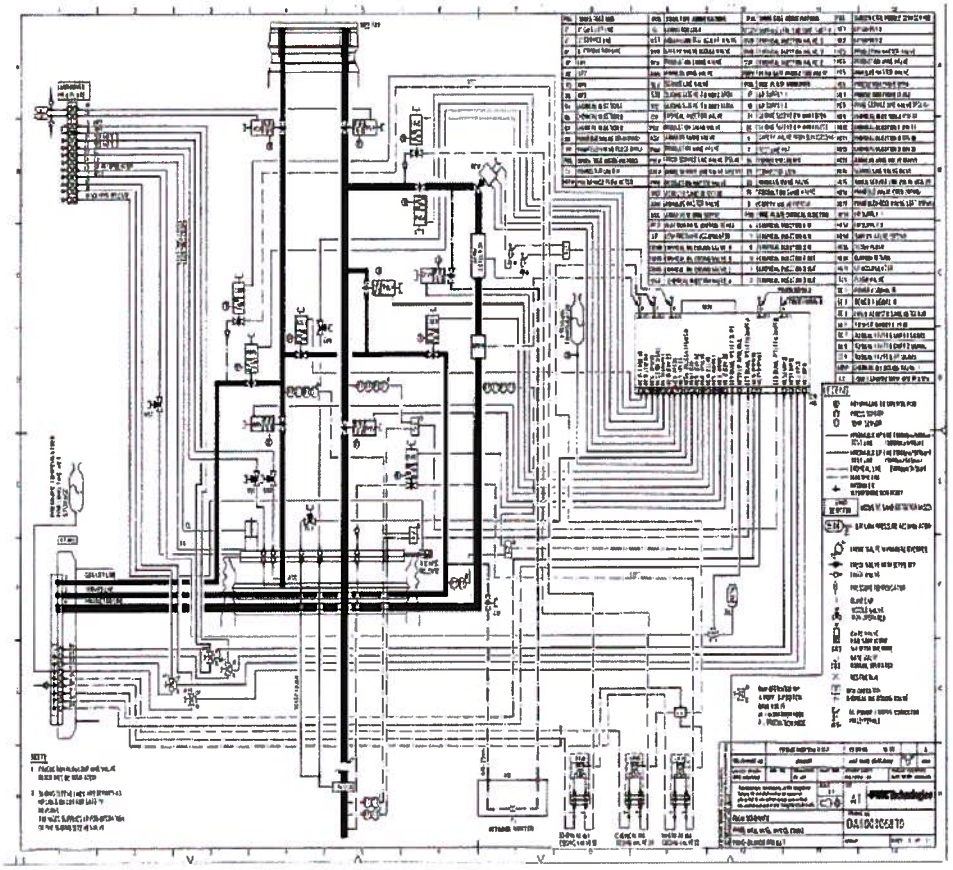

TOTAL E&P ANGOLA
BLOCK 17 PAZFLOR PROJECT

BLOCK 17 PAZFLOR PROJECT

FMC Technologies

WORKOVER CONTROL SYSTEM

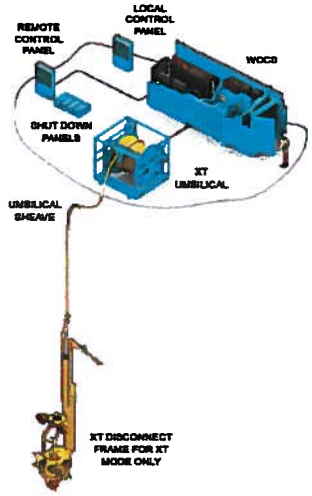

FPSO TOPSIDE CONTROL EQUIPMENT

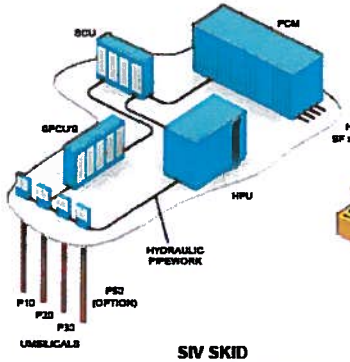

SIV SKID

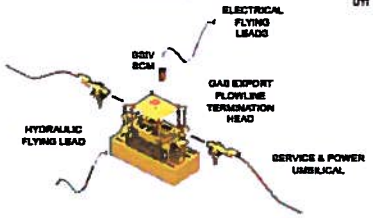

MIOCENE AND OLIGOCENE, TYPICAL INJECTION SYSTEM

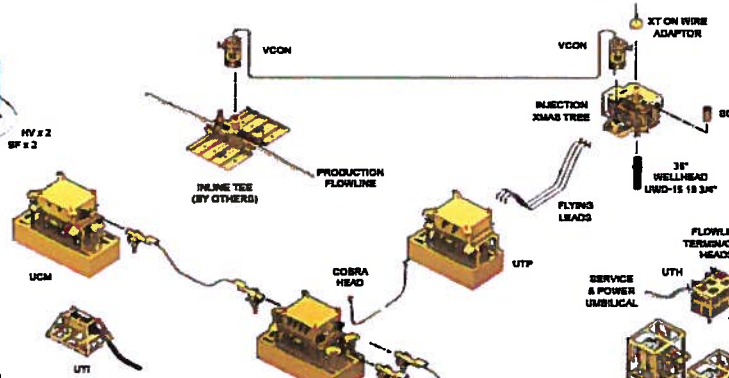

MIOCENE, TYPICAL SUBSEA SEPARATION UNIT

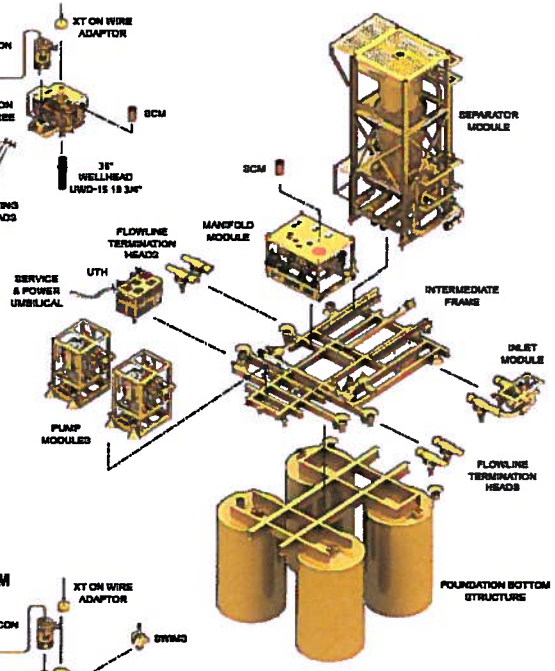

OLIGOCENE, TYPICAL PRODUCTION SYSTEM

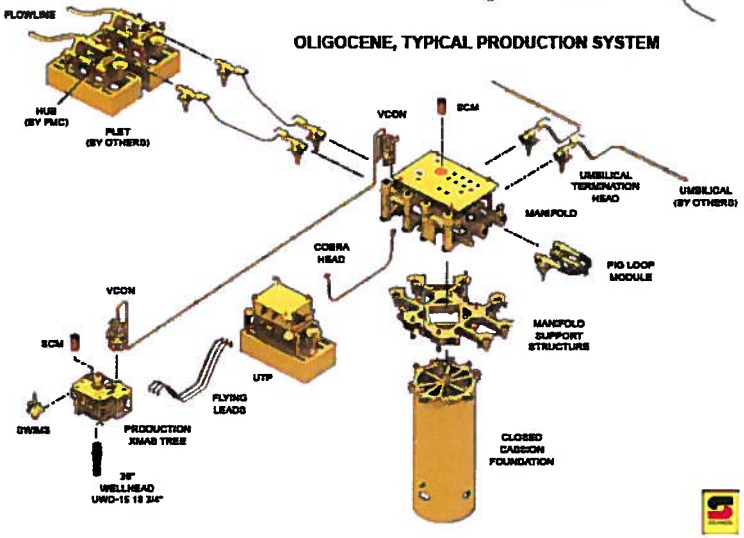

MIOCENE, TYPICAL PRODUCTION SYSTEM

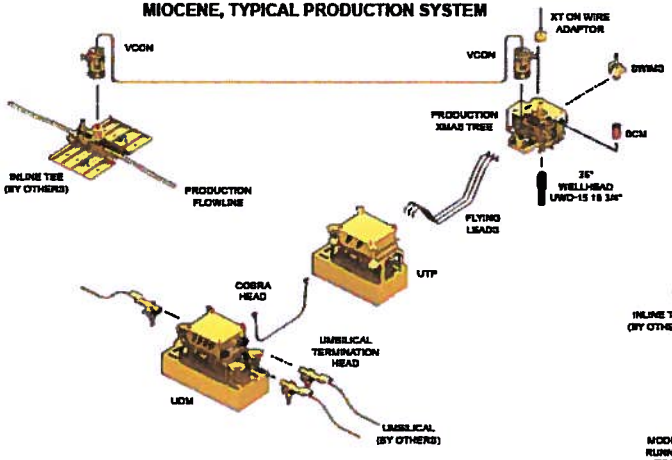

INTERVENTION TOOLING (TYPICAL)

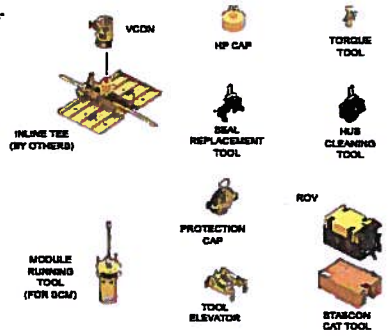

StatoilHydro Esso bp

FMC Technologies

System engineering in 4 phases in a project.

- Project execution phase
  - Role and objective:
    - Manage the technology qualification program.
    - Do the Hydraulic and electrical analyses.
    - Perform the flow assurance study (Insulation, injection, errosion)
    - ROV access verification study.
    - Make system drawings and models.
    - Manage technical risk process.
    - Field lay out and system schematics/P&IDs
    - Perform system review and system documents design review.
    - Establish system test program.
    - Lead and fasilitate the internal and external interface work
    - Tolerance and flexibility analyses.
    - Perform the engineering safety and reliability activities identified in the program.

System engineering in Project execution phase.

Engineering safety and reliability program (typical content).

- **HAZID** (Hazard Identification); A systematic study aiming for identification of the harmful failures/events by the use of guidewords.
- **HAZOP** (Hazard and OPerability analysis); A systematic study of the system design aiming for identification of the harmful deviations from the design intent, which require mitigation.
- **FMECA** (Failure Mode, Effects and Criticality Analysis); FMECA is a methodology to identify and analyze "all" potential failure modes, the effects of these failure modes.
- **FTA** (Fault Tree Analysis); A graphical technique that models how logical relationships can result in an undesirable outcome.
- **RAM** (Reliability, Availability and Maintainability analysis); A method for optimizing system reliability and increasing production availability. A RAM analysis is performed by system simulation.

System engineering in Project execution phase.

Risk process.

- Identify all potential risks.
- Monitor the identified items through the project and quantify the risk by assessing probability and consequences (scoring 1:5)

Pazflor Risk Matrix, rating 5x5

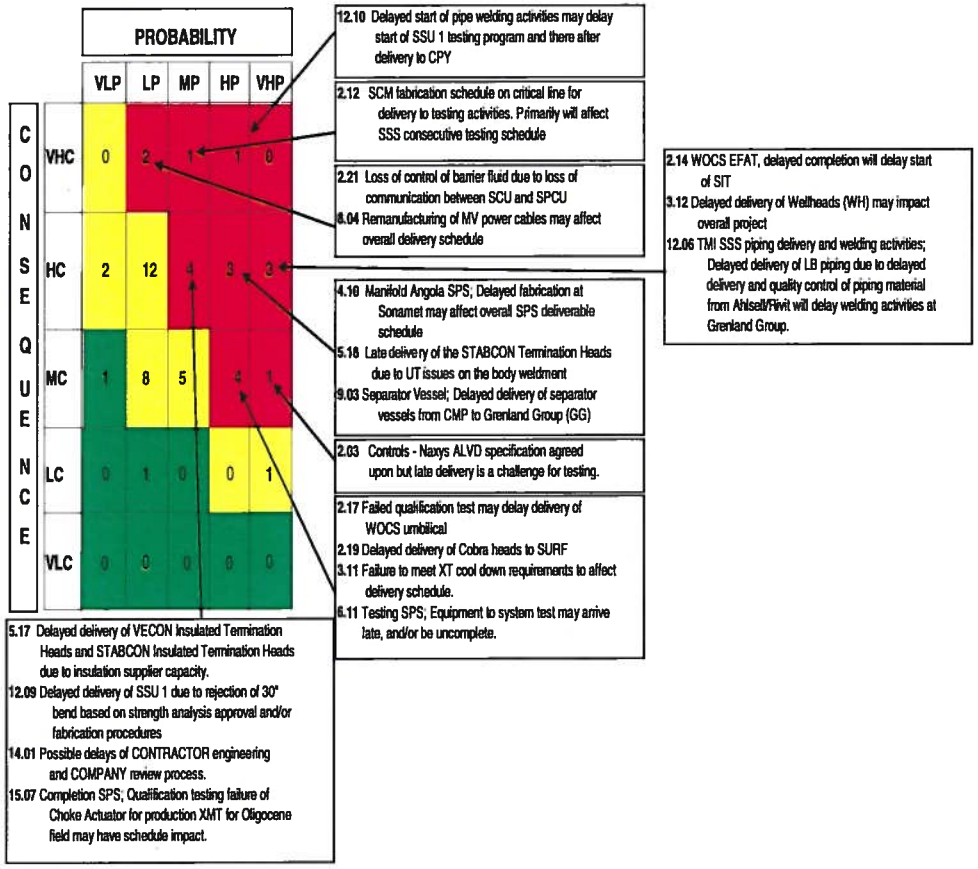

System engineering in Project execution phase.

ROV access study.

- A detailed study to ensure sufficient access for a work ROV.
  - All areas where ROV intervention or observation is required to be systematically assessed and workspace to be verified.
  - The tools used for this work is 3D models and Purpose made ROV operation simulation programs.
  - Show example.

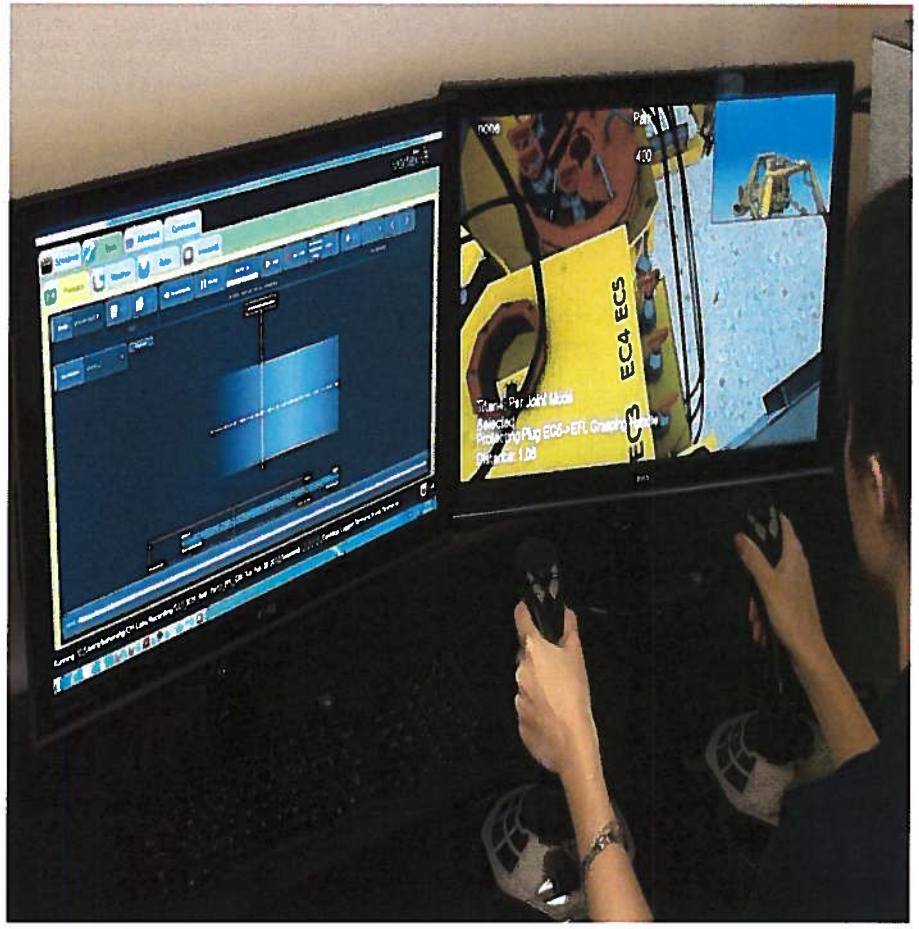

System engineering in Project execution phase.

Technical Qualification Program (TQP).

- Establish and maintain a TQP matrix, and a schedule showing all TQP activities.
- Manage and follow up all TQP activities and report.
- Ensure that the technology is fully qualified for the relevant conditions like temperature, water depth, pressure, rig movements (environmental loads) and required functionality.

System engineering in Project execution phase.

Hydraulic and electrical analyses.

- Ensure correct fuctionality throughout the subsea field.
- Special focus on the long step-out wells and wells in complicated configurations.
- Important for sizing and to determine the position of the accumulators.
- Ensure correct communication speed and sampling time.
- Ensure quick response time in case of a emergency shut down.
- For work-over system, also ensure correct response time in case of an emergency disconnect.
- Tools: special developed hydraulic and electrical simulation software

System engineering in Project execution phase.

Flow assurance study and analyses.

- Flow assurance includes all issues important to maintaining the flow of oil & gas from reservoir to reception facilities.
- Detailed flow assurance analysis for subsea components
- Analysis of cold spots – thermal design
- Errosion hot spots – pipeline design
- Vibration assessment
- Input to sensor location
- Define operating procedures, e.g. startup, shutdown
- Tools, various software to analyse the thermal performance, the multiphase flow and the probability for erosion.

Flow Assurance study

- Flow assurance is to take precautions to **<u>Ensure Deliverability and Operability</u>**

Thermal Insulation Design
to keep fluids warm and minimize risk of hydrates and wax

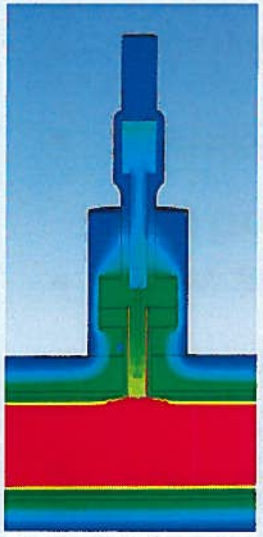

Erosion analysis
Erosion wear in complex geometries

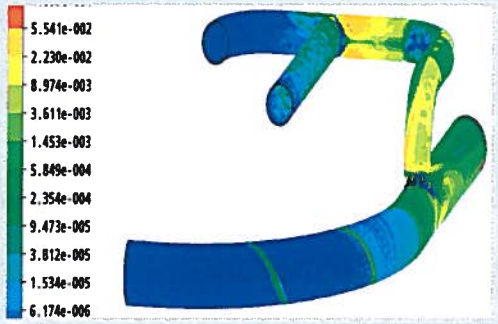

Pipeline sizing pressure loss vs slugging

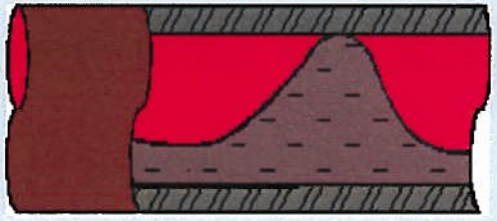

Design of Chemical Injection Systems
to minimize risk of hydrates, scale, corrosion etc.

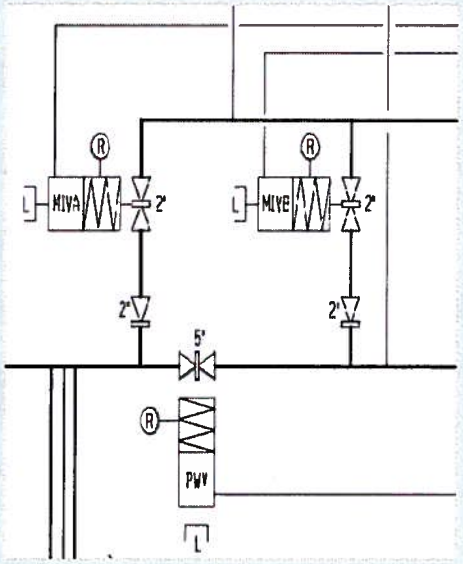

Choke design
to minimize pressure loss and erosion

Gas Hydrates

FMC Technologies

How the details effects system design. Examples from Pazflor project

Pazflor at a glance

- Largest subsea development project at the time of award
- Pazflor marks a world-first field which is dependent on separation technology to produce oil.
- Three identical Subsea Separation Units each consisting of
  - a vertical gas/liquid separator
  - two hybrid pumps
  - inlet module
  - a manifold

  All on a intermediate frame on a foundation bottom structure

Pazflor Subsea Separation Station

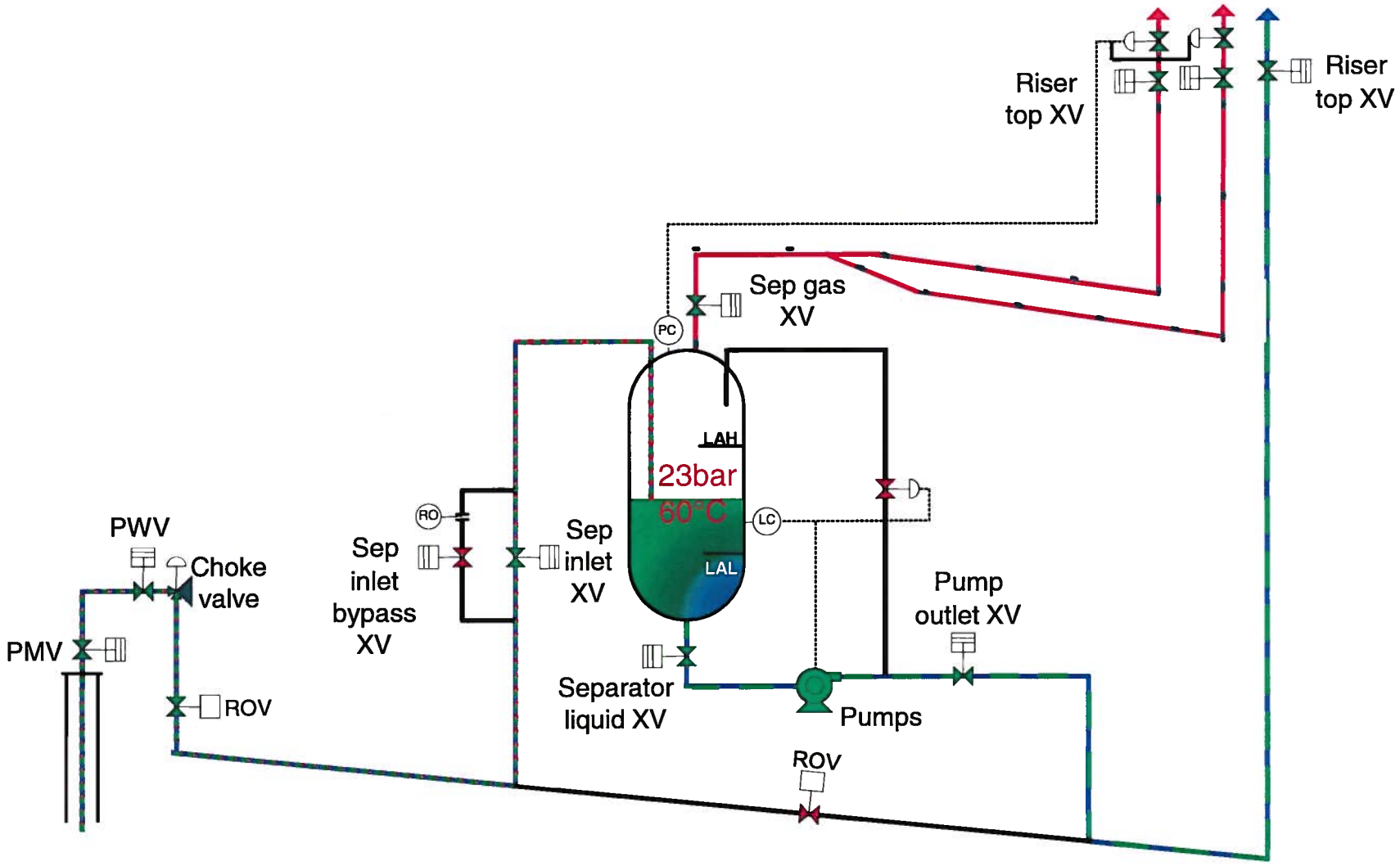

Key challenges for process station system engineering.

- To keep the temperature of the fluid above the critical temperatur limit.
  - Assess the thermal properties for all elements in the flow loop.
  - Detailed assessment of all potential cold and hot spots.
    - Example. Insulation of connectors are considered to be critical for the thermal performance of the system.
  - Performed a full system analyses followed by a cool down test to verify the thermal performance. (Requirements: 6 hr before reaching hydrate formation temperature).
  - Detailed analyses of the themal performance of the connector followed by a component cool down test.
  - Insulated covers vs. Connectors with insulation incorporated.
  - Will affect size and weight.

Number of and position of the connectors.

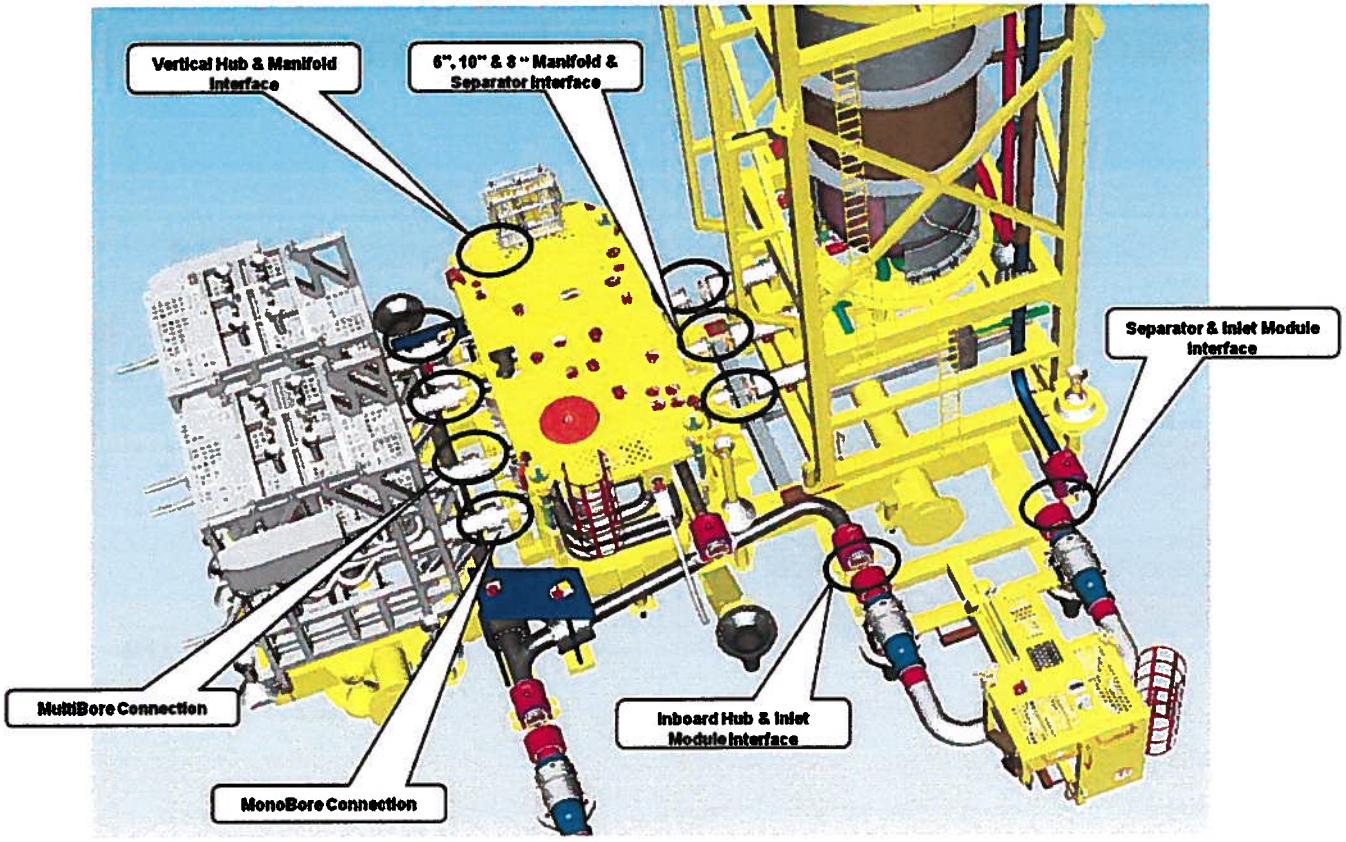

Insulated Termination Heads

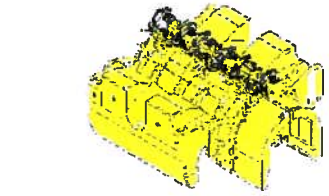

8h cap

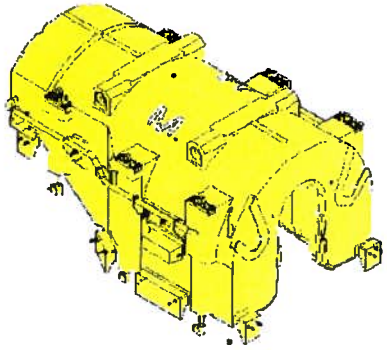

21h cap

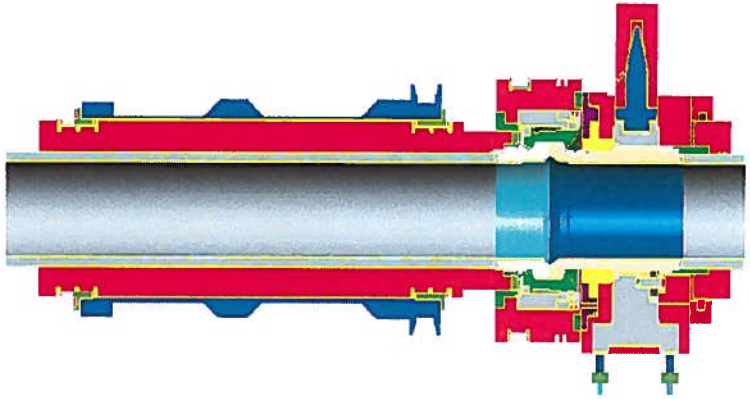

- FMC's system responsibility:
- Provide customer with a subsea system that operates without hydrate blockage in any operating mode

Thermal design challenges

- Understand *where* heat losses are and *how* much heat is lost
- Accurately determine where to insulate and *how* much
  - according to customers specifications
  - or help customer with the required design
- Meet Customer cool-down requirements

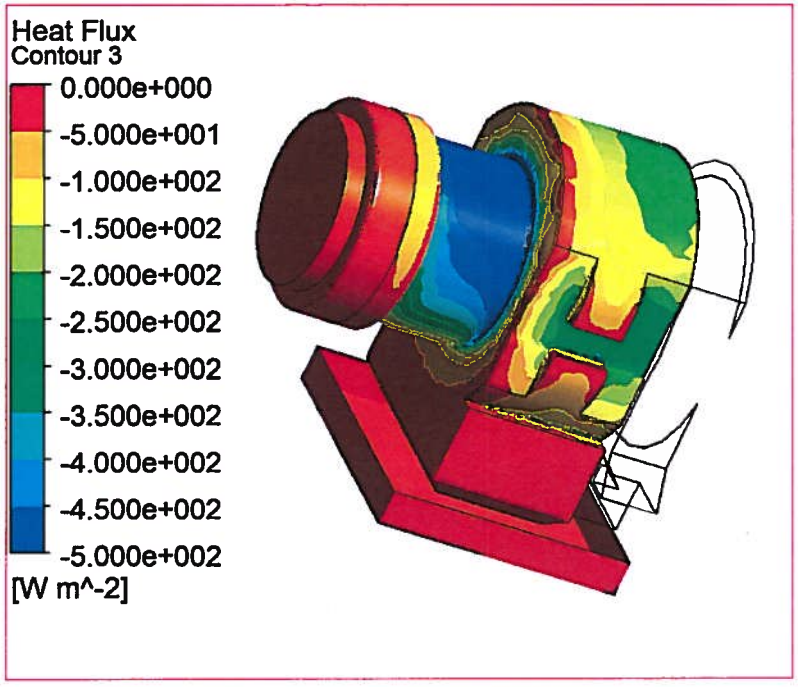

Full Scale Thermal Test

- Full scale thermal tests are related to verification of the thermal insulation design and simulation models.
- Water/MEG is circulated until equipment is heated up to a steady state condition, and cool down time is recorded

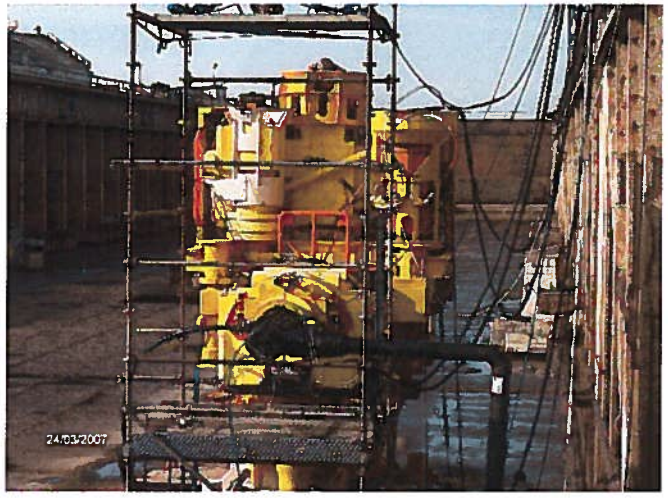

Insulated Termination Heads FEA vs Testing

- Comparison between the test temperature and the FEA shows that the FEA results are conservative with 2.2 to 4.6 °C.

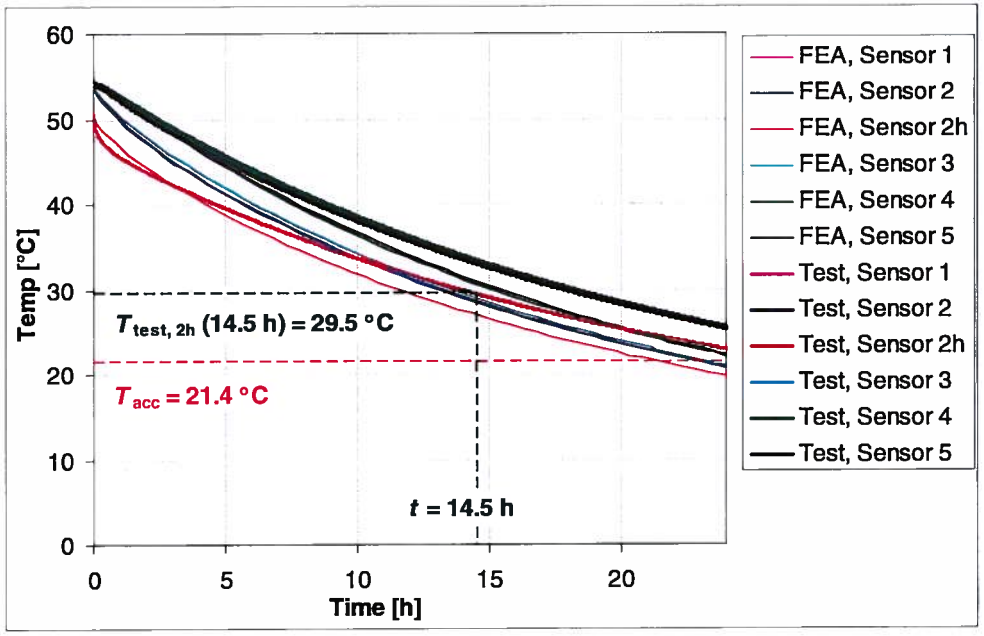

Key challenges for process station system engineering.

- To ensure sufficient separation of gas and liquid.
  - Detail design of alternative separator module internals.
  - Perform scaled tests.
  - Perform detailed dynamic analyses of the alternatives.
  - Pros and cons assessment comparing all alternatives.
  - Assess product technical maturity.
  - Selection (expected gas content in fluid after separation) will affect selection of pump (single phase, multiphase or hybride pumps) which will largely affect the system design.

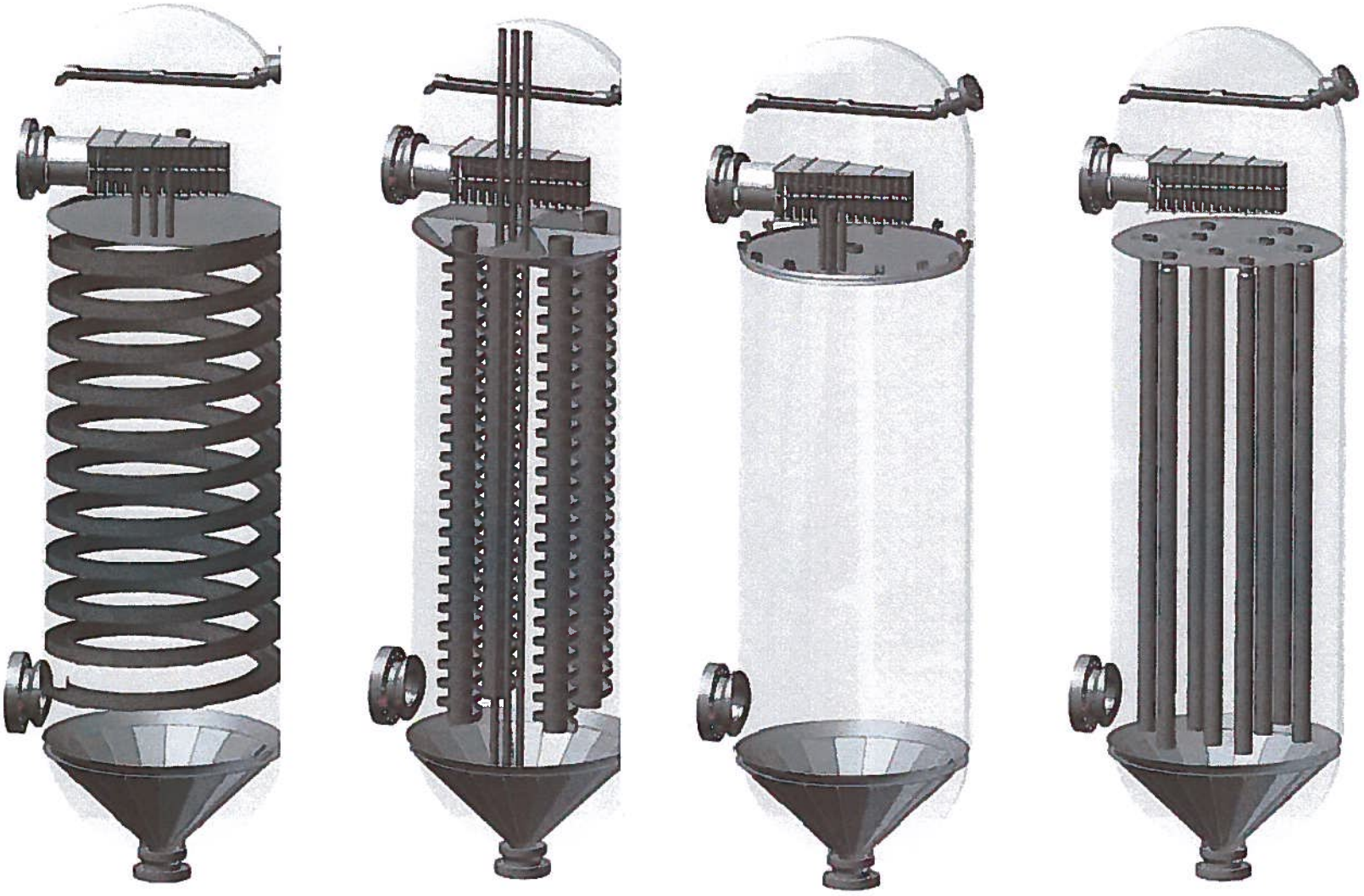

Initial small scale testing

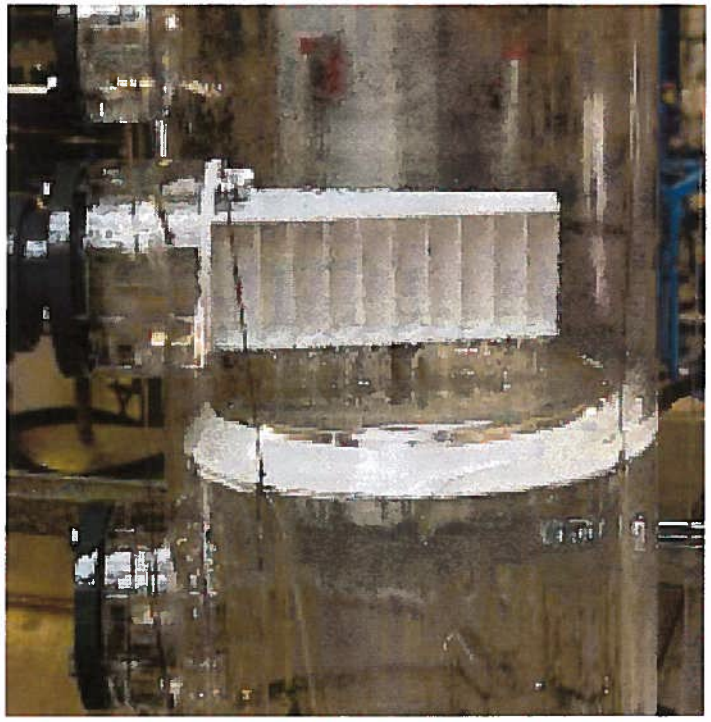

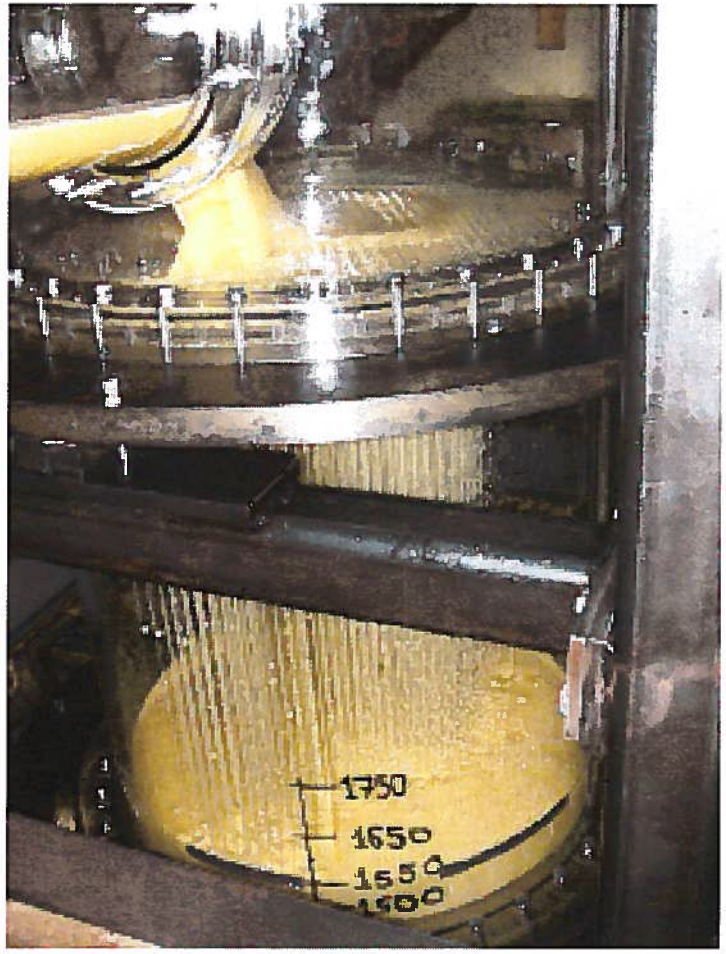

Choosen concept for liquid phase

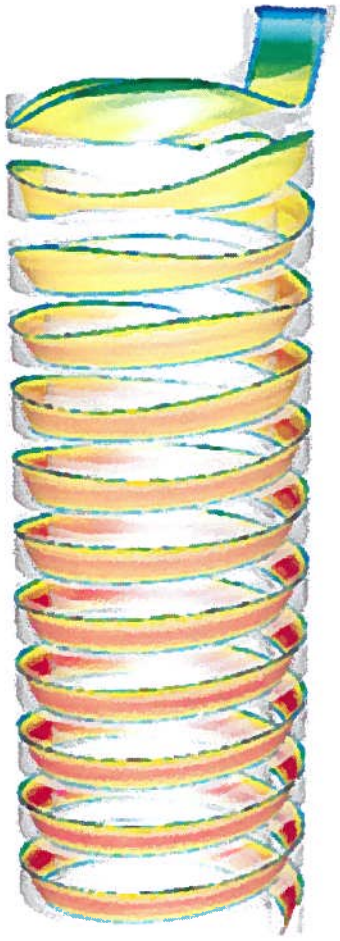

Test loop

A scaled test loop was built in our test facilities in Arnhem:

- ¼ diameter and ½ height

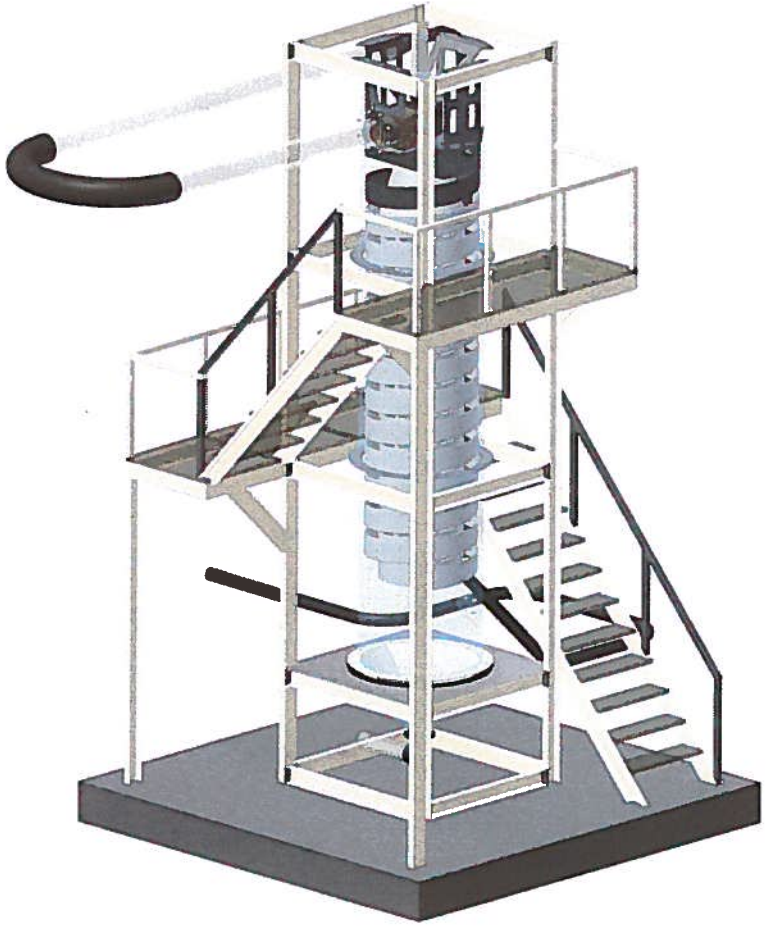

FMC Technologies

Function Test

- **SSU connected to a purpose built test rig with capacity from 200 to 1,000 m3/hr (150,000 bbl/d)**
  - Buffer tank (150m3 , atmospheric)
  - Circulation pumps (500m3/hr @ 10bar)
  - Air compressor for maintaining pressure in Separator tank
  - HV supply from a purpose built net station

System engineering in 4 phases of a project.

- Verification and test phase of the project.
  - System tests
    - System intergration test.
    - System cool down tests.
    - System function test.
    - Shallow water test.

Testing Pyramide

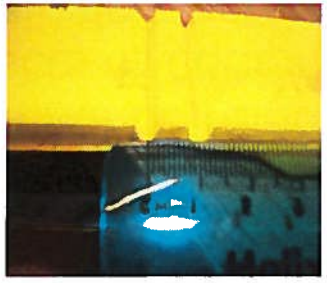

System Test: Manifold SIT, SSS SIT, FT etc	System Test (FT, SUT, SIT, SWT, CDT)
FAT: XT, SCM, HPU, etc EFAT: Controls System, Pump System, etc	Component Testing (FAT, EFAT, CDT)
59 product qualifications in Pazflor	New Technology and Qualification Testing (TQP)

Shallow Water Test

- SWT will be related to the aspects of equipment installation, retrieval, interfaces and operations.
- SWT is also to prove the procedures and to simulate the sequence of offshore operations

System Integration Test

- SIT will be land based
- SIT will consist of tests on a system level to demonstrate correct interface and operation.
- SIT is also to prove the procedures and to simulate the sequence of offshore operations..
- Movie.

Questions?

Thank you for your attention.